Network Analysis

Md. Manjurul Gani
Assistant Professor
Dept. of EEE, CUET

Network Analysis

Node Analysis

Mesh Analysis

What we will do with network analysis?

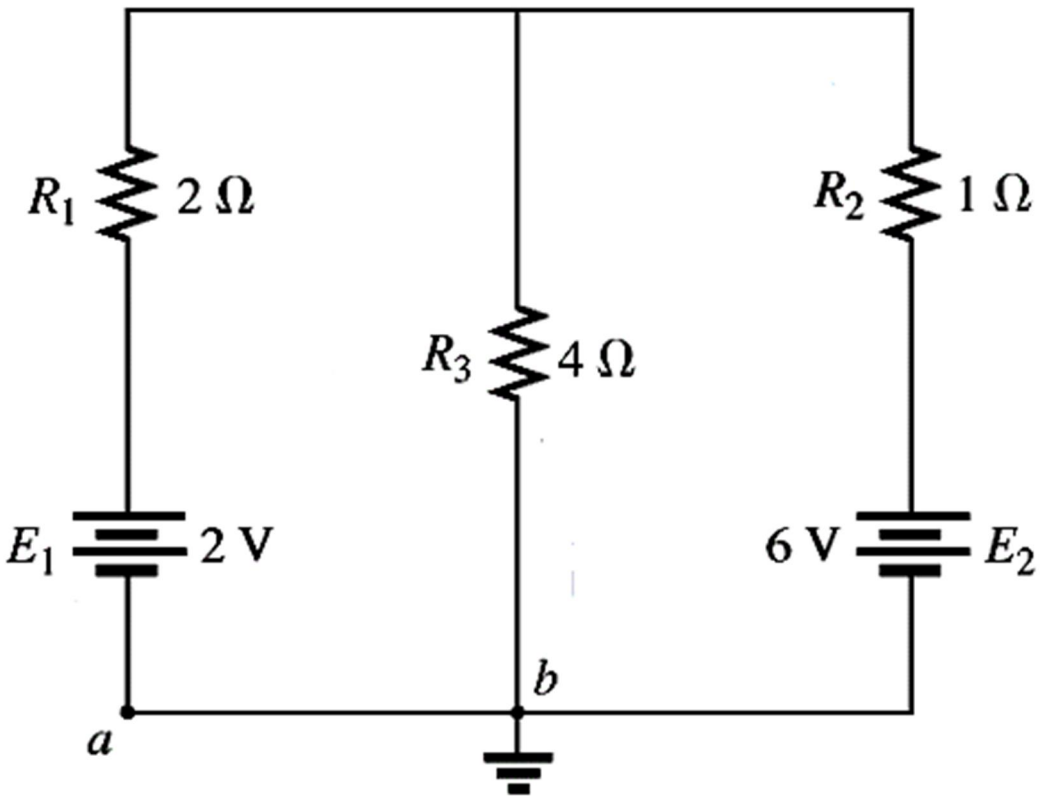

Node Analysis

Node ?

A node is defined as a junction of two or more branches.

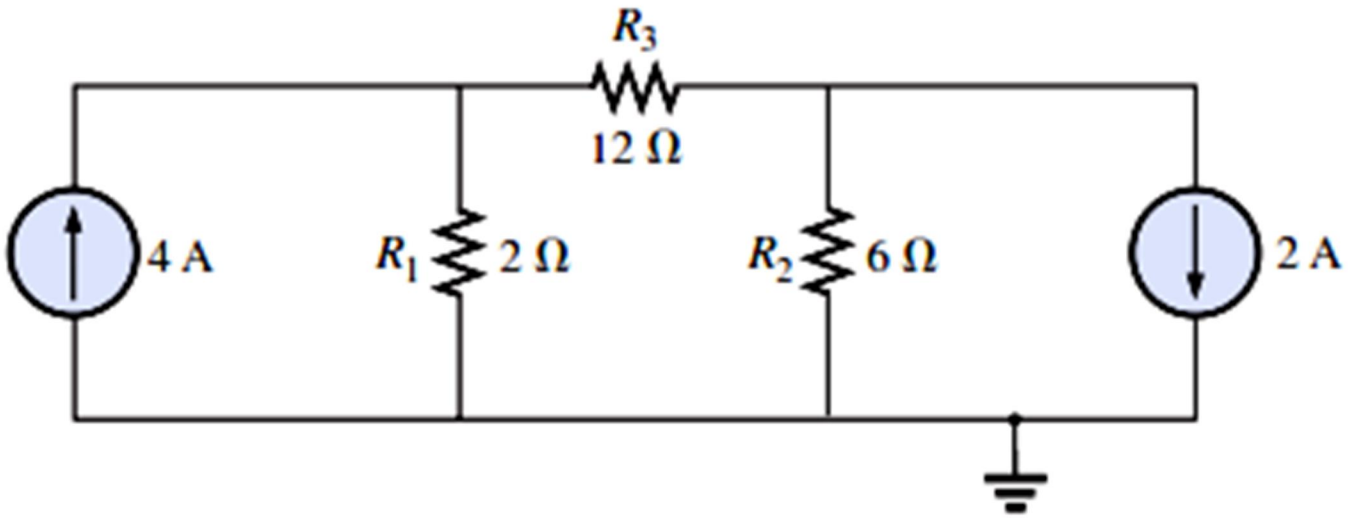

3 node
1 reference node
2 node with certain potential

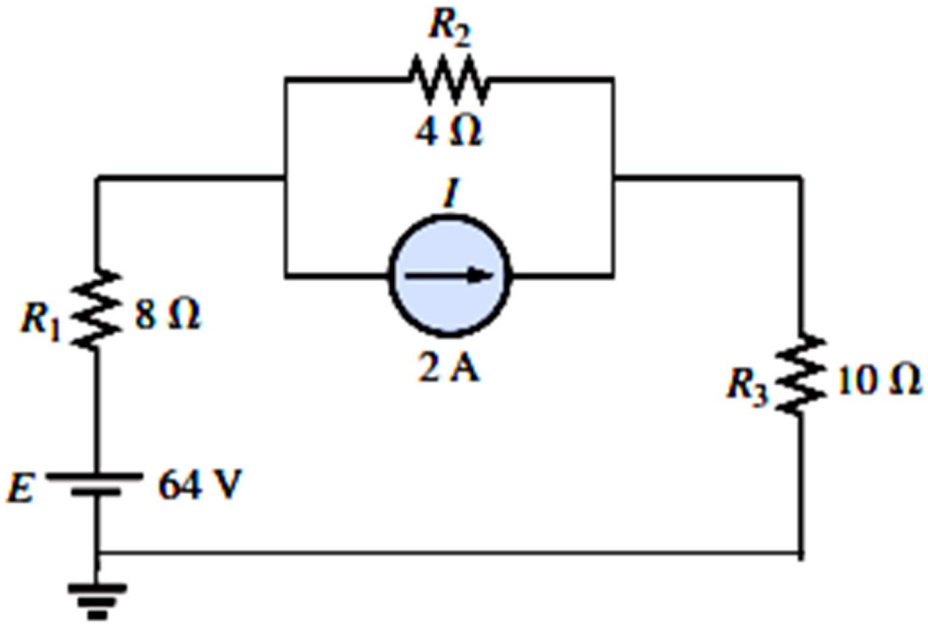

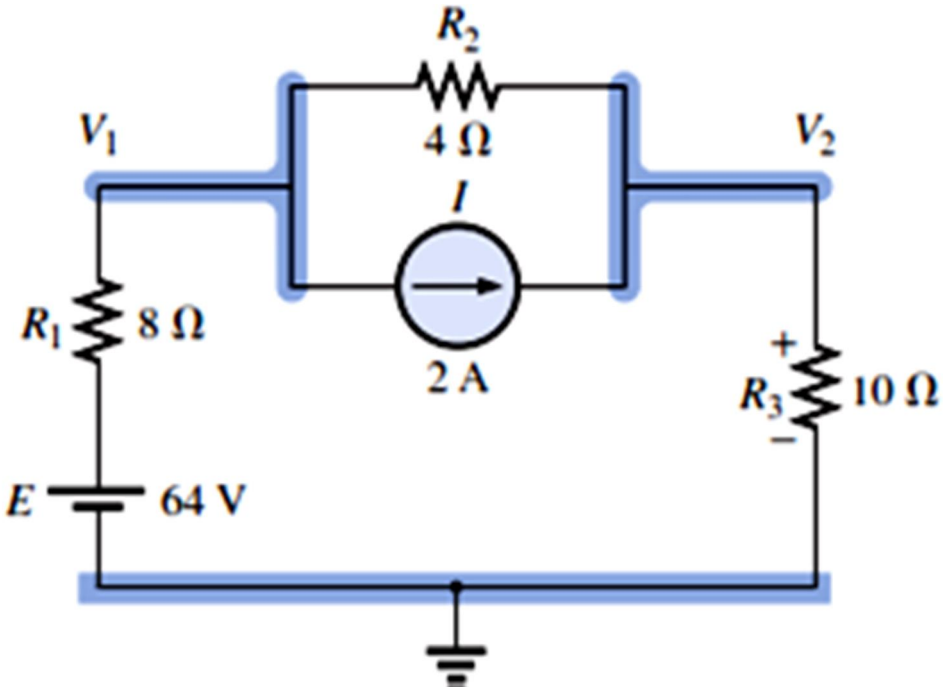

3 node

1 reference node (which one)

2 node with certain potential

Calculate the node voltages

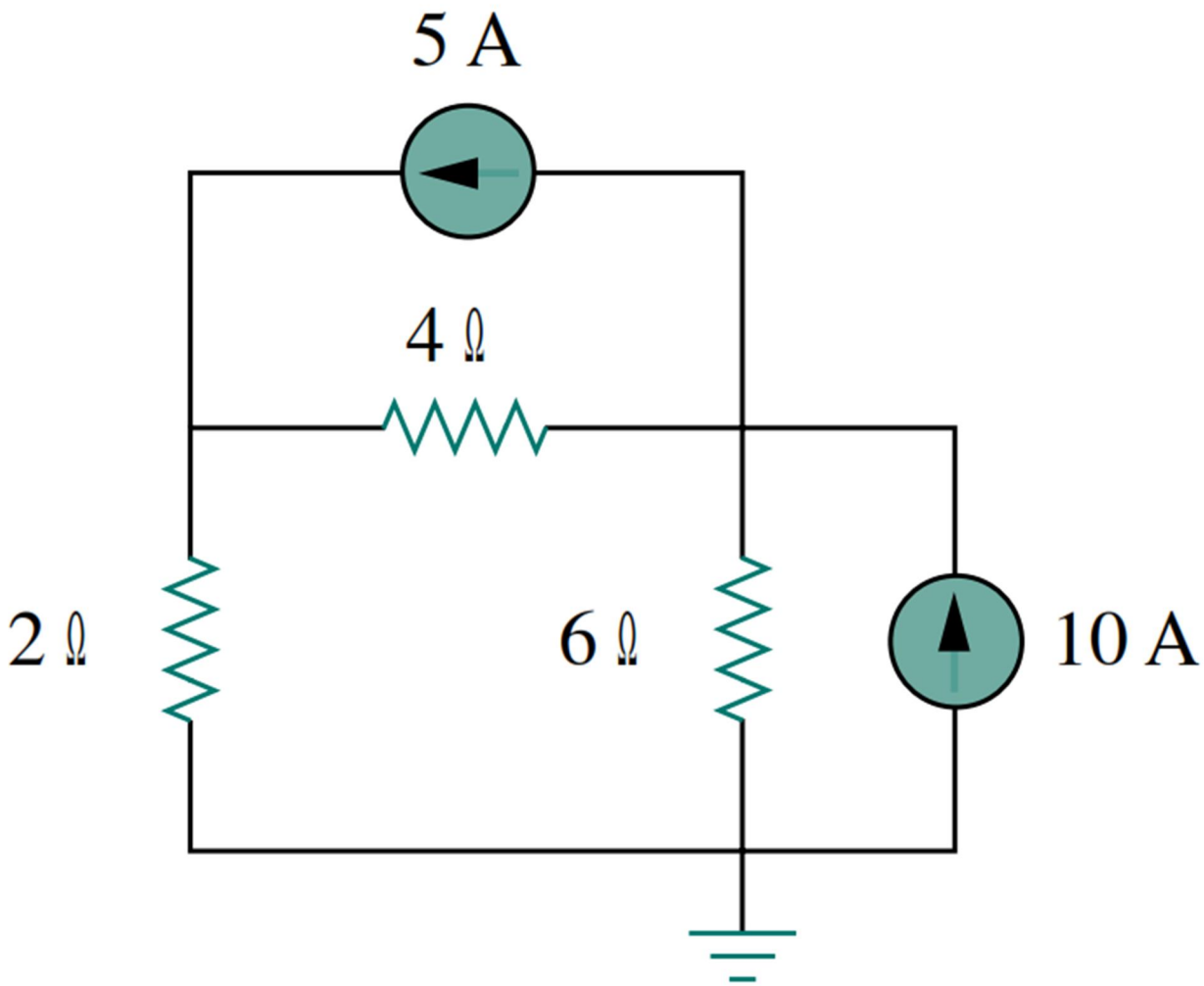

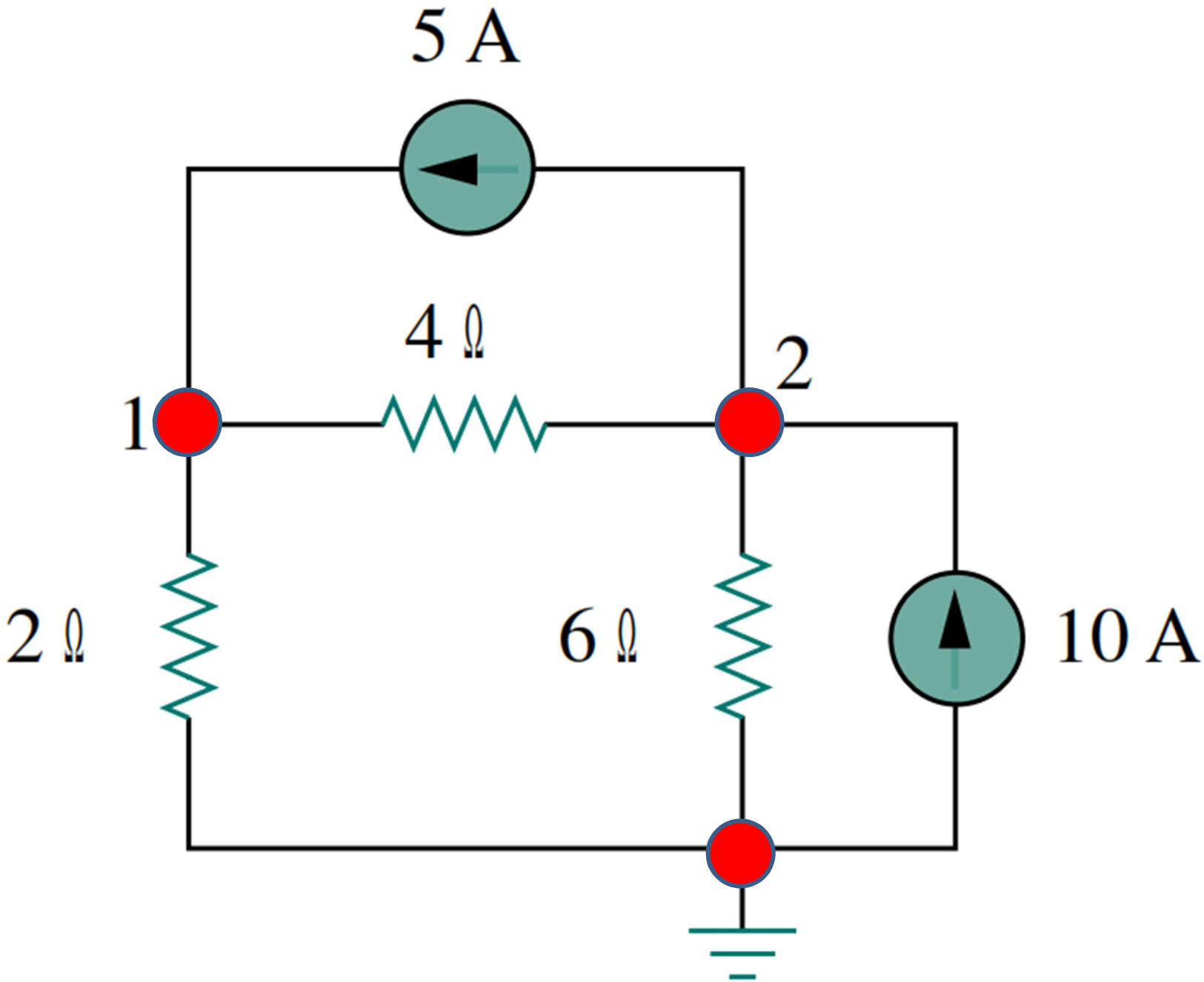
5 A
4 Ω
1
2
2 Ω
6 Ω
10 A

Obtain the node voltages

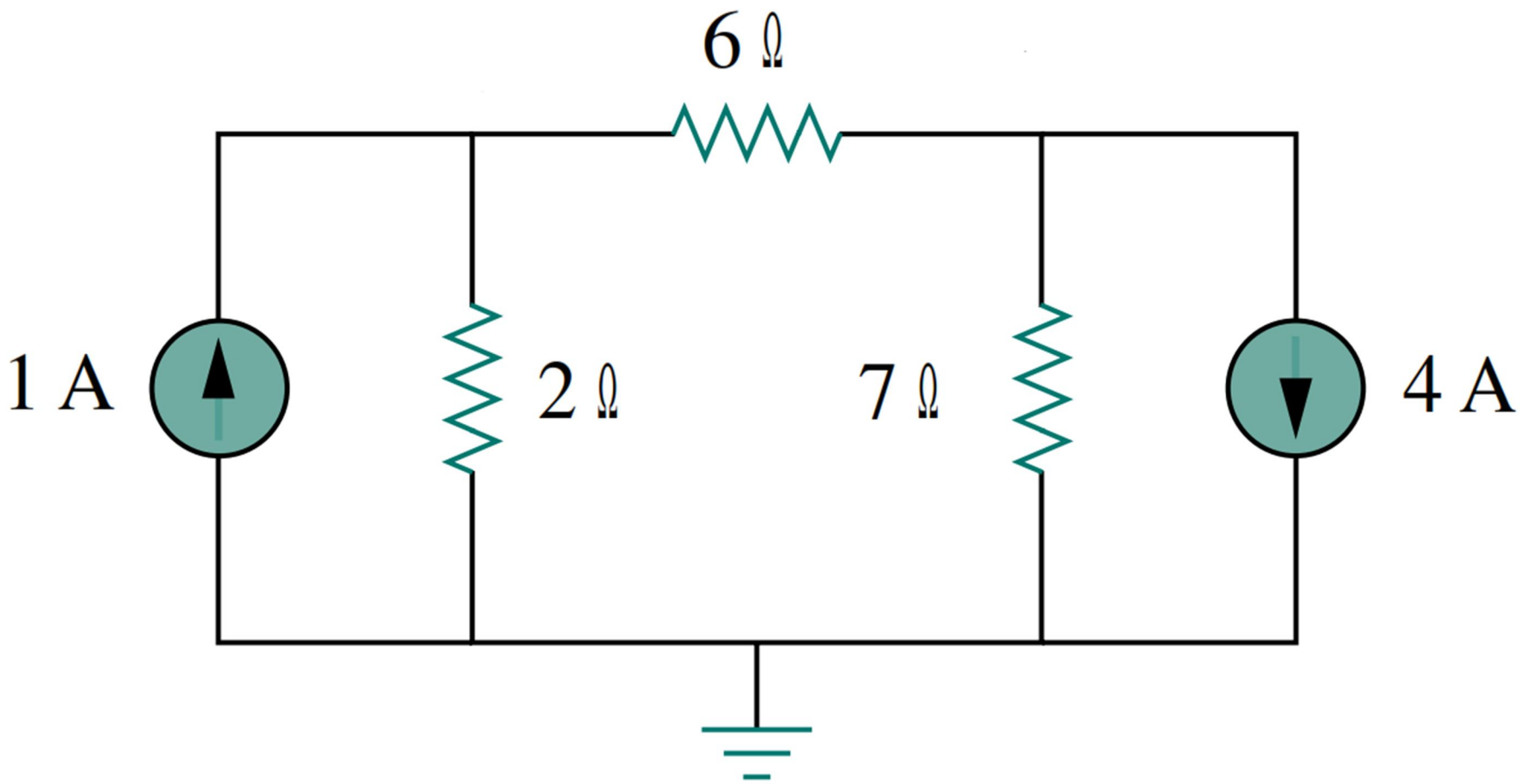

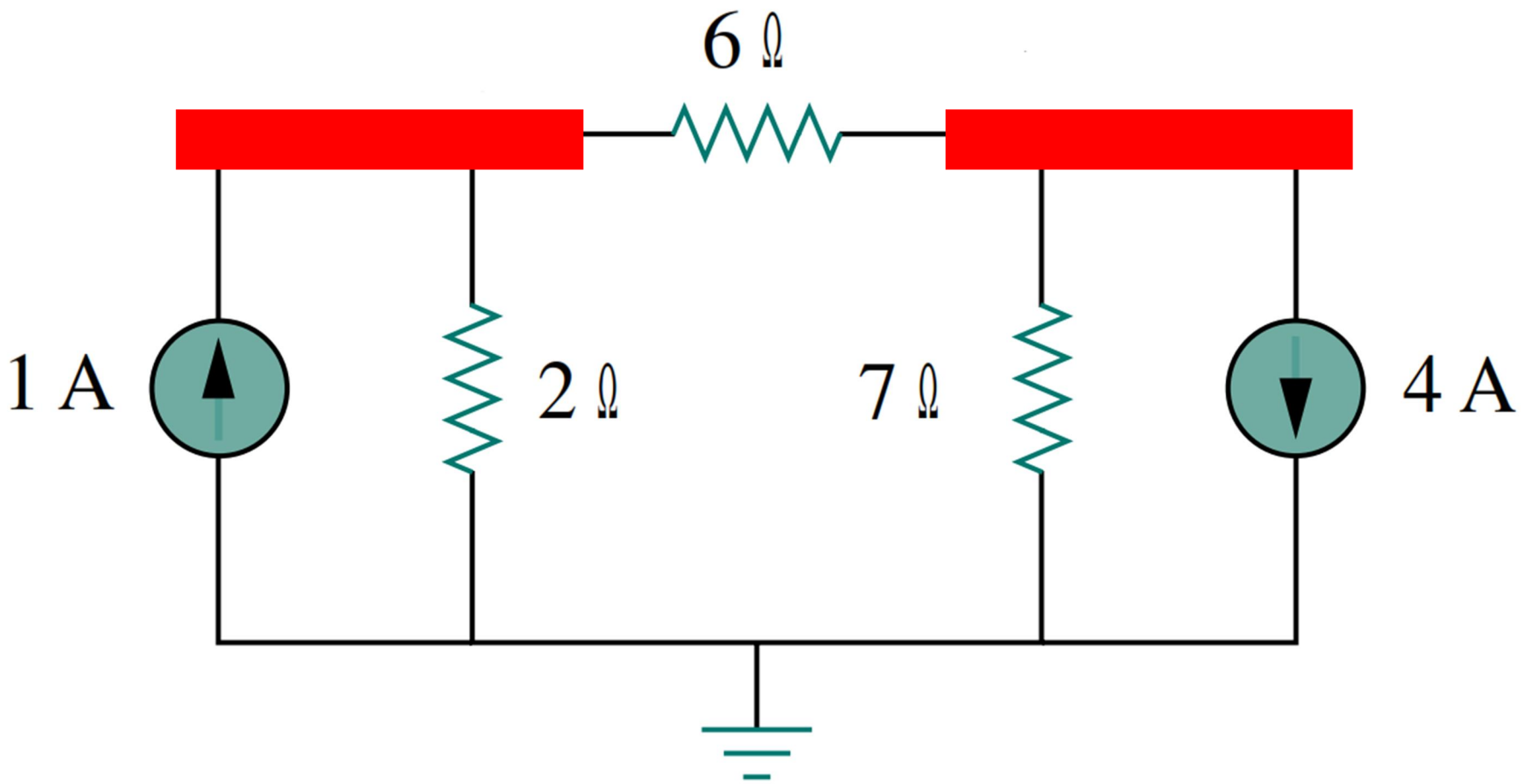
6 Ω
1 A
2 Ω
7 Ω
4 A

Q. Using nodal analysis find the current through each branch of the network.

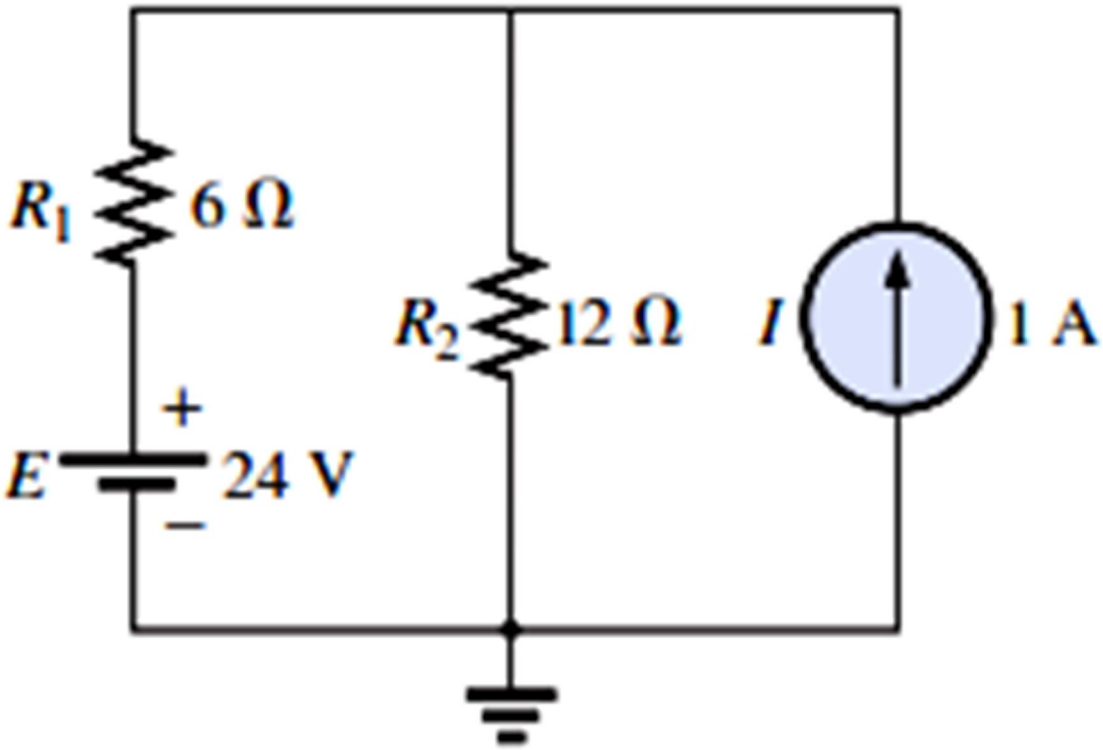

Mesh Analysis

Mesh ?

It is a loop that contains no other loop within it.

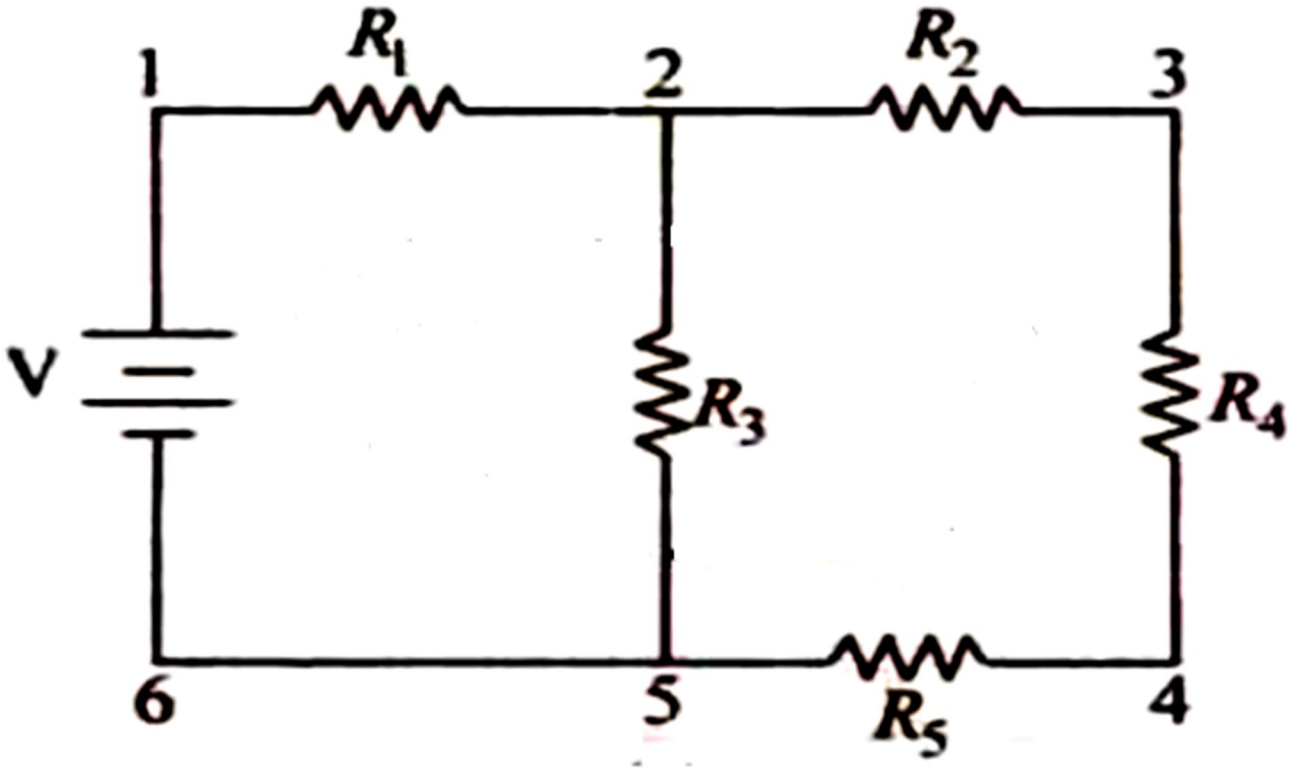

3 Loops

2 meshes

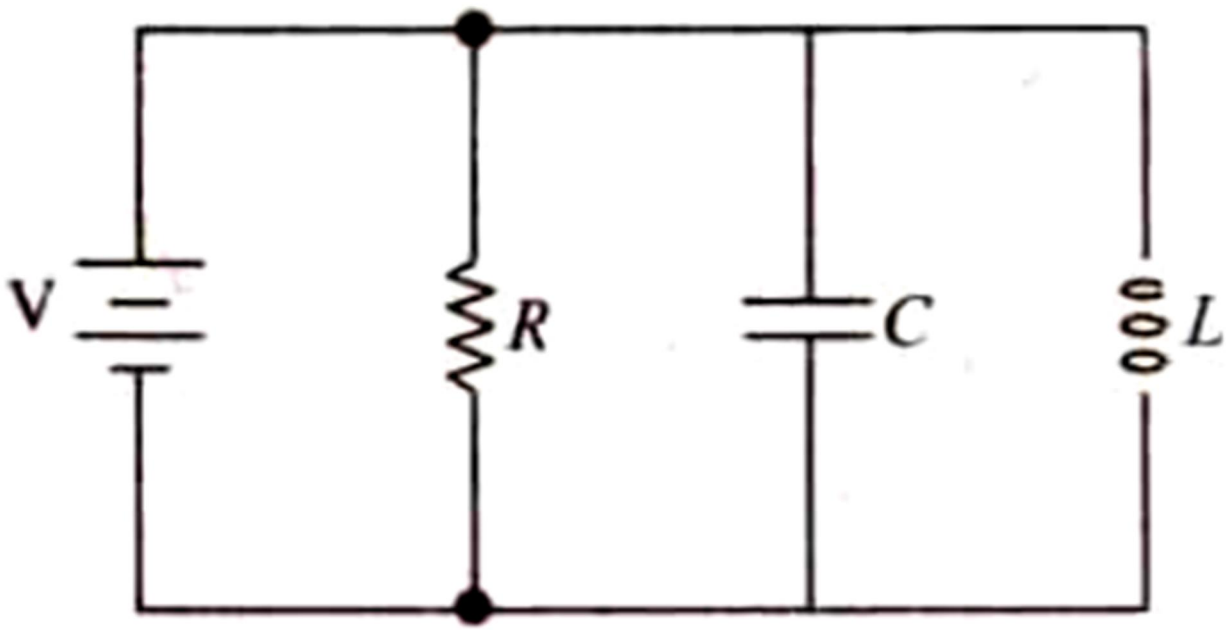

6 Loops

3 meshes

For the circuit below, find the branch currents I_1, I_2 and I_3 sing mesh analysis.

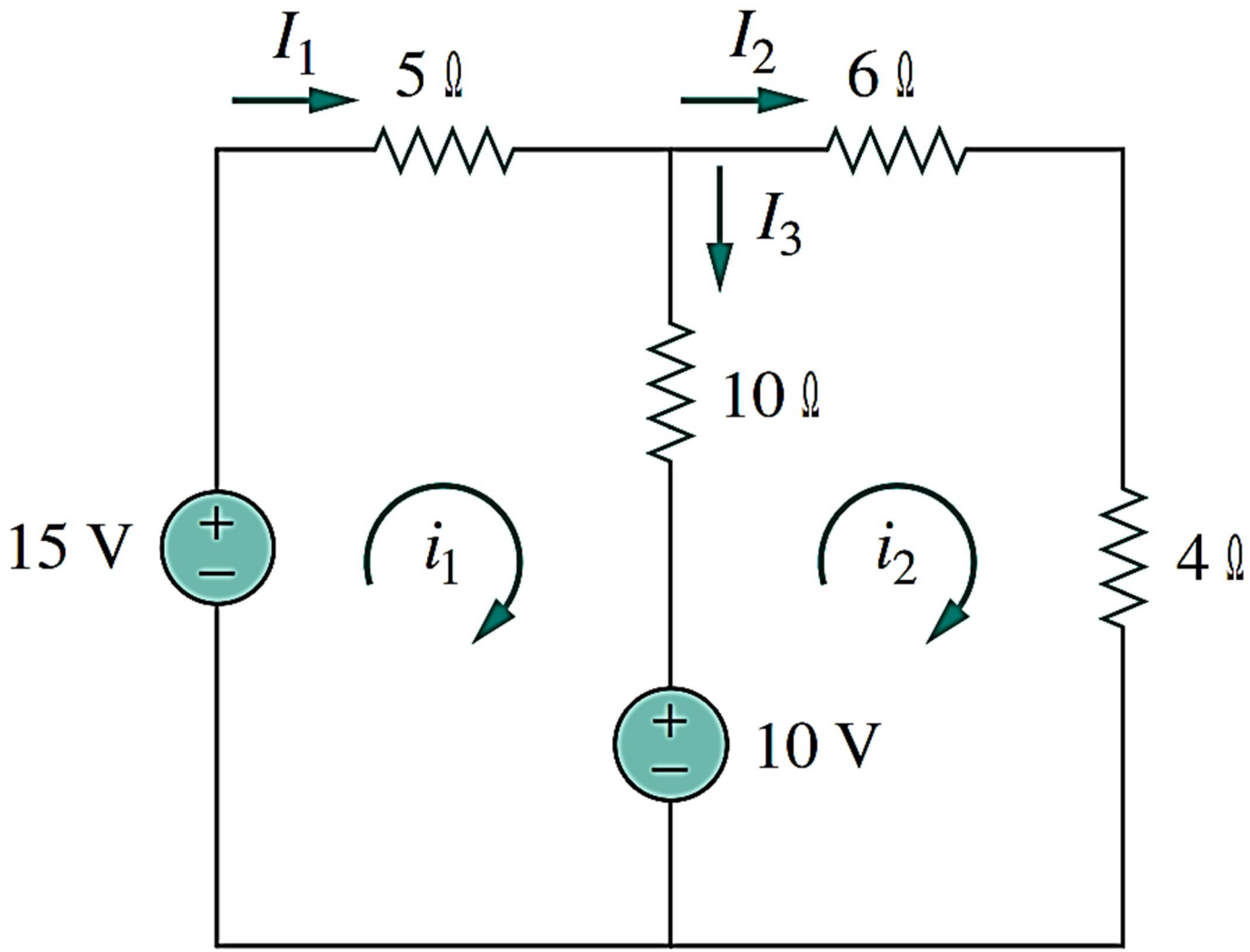

Calculate the mesh currents I_1, I_2

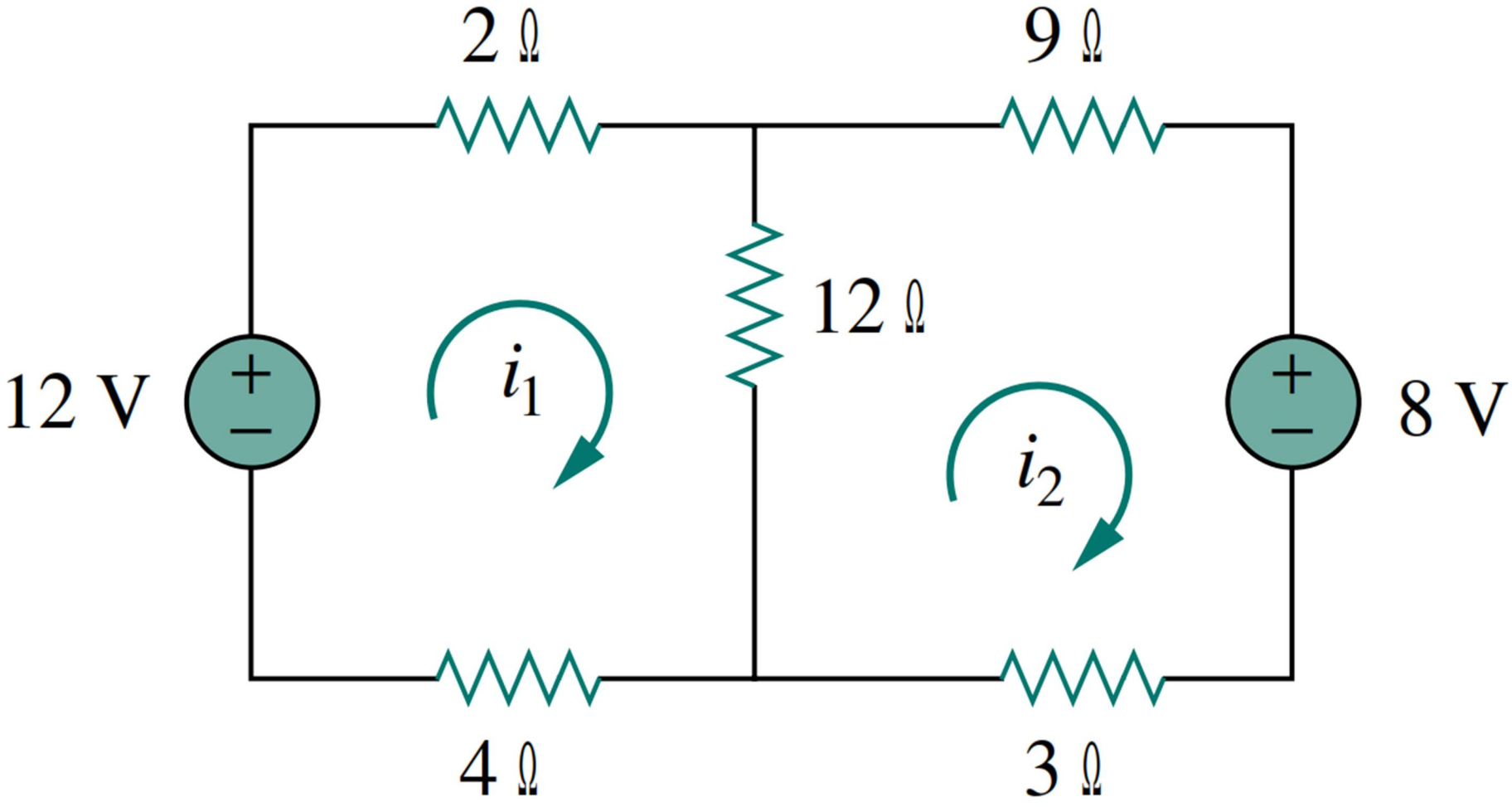
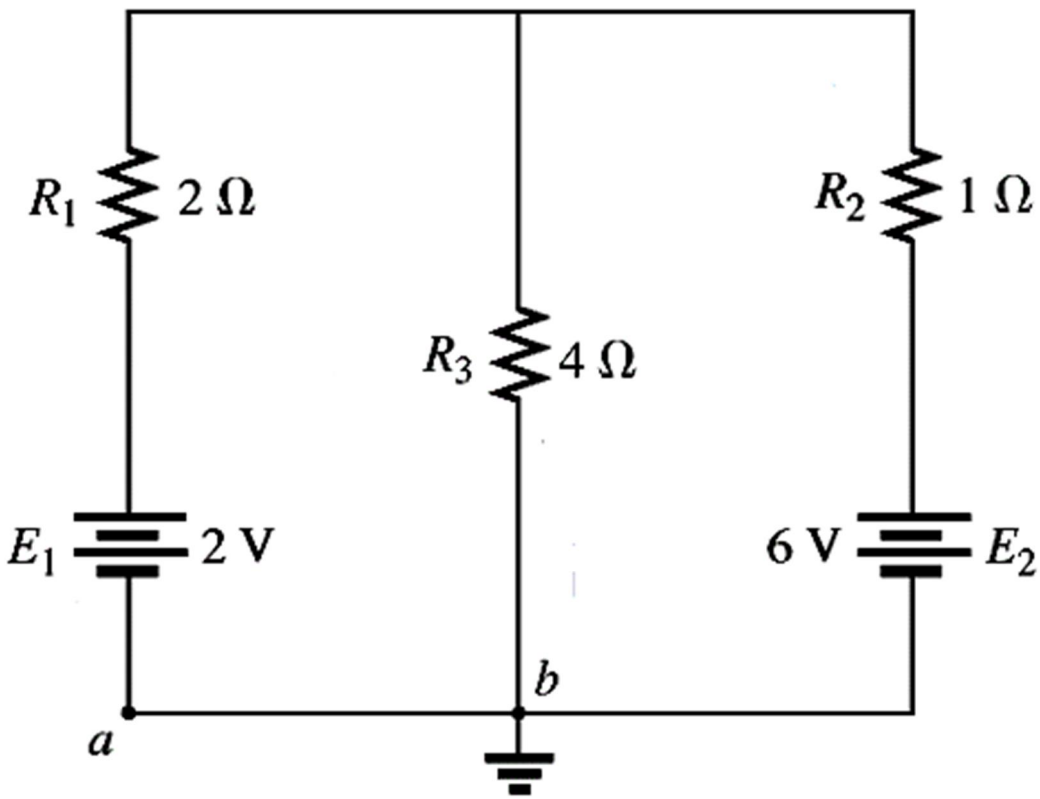
Using mesh analysis find the current through each branch of the network.